Power supply (and USB)

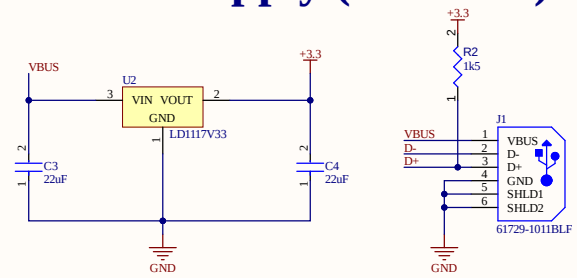

LCD

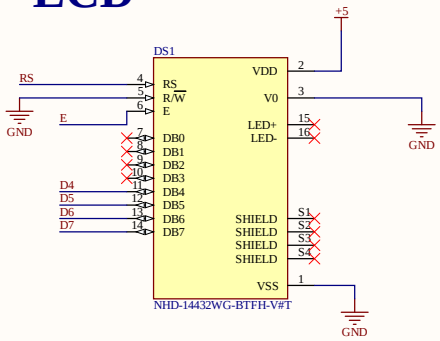

Microcontroller

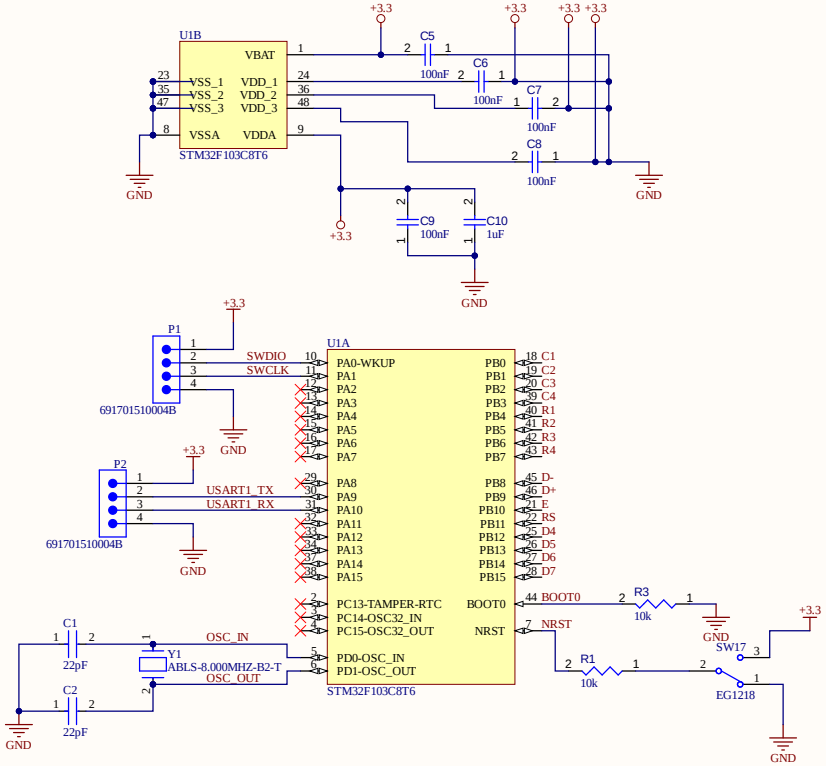

Button

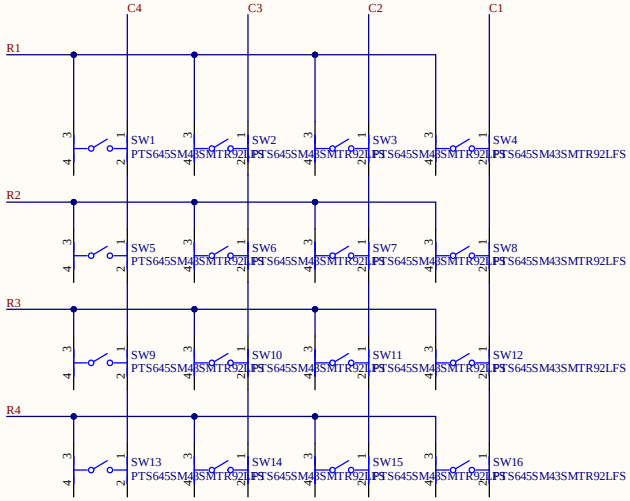

Title	Calculator with keypad and LCD	
Size A3	Number 1/1	Revision
Date: 3/08/2026		Sheet of
File: C:\Users\..\Sheet1.SchDoc		Drawn By: